energy systems

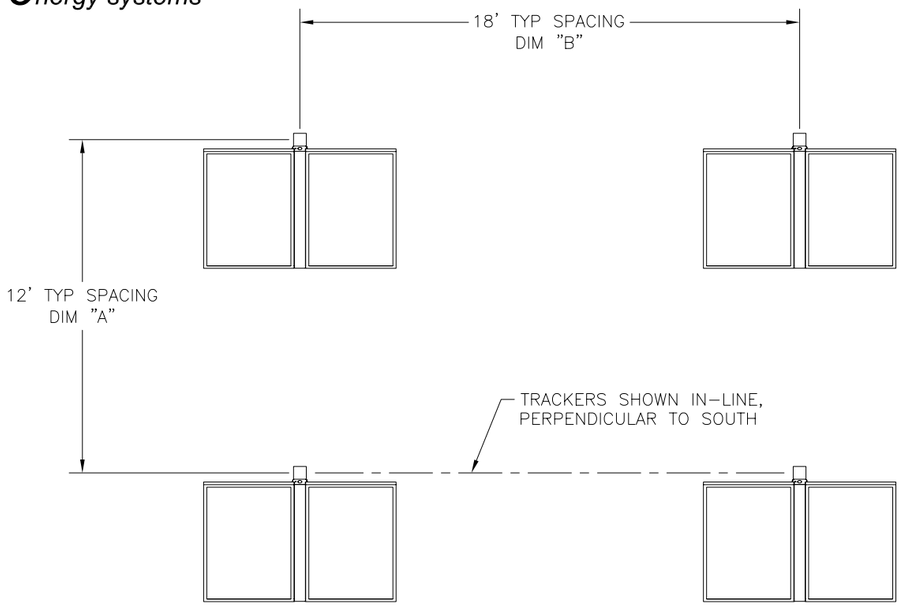

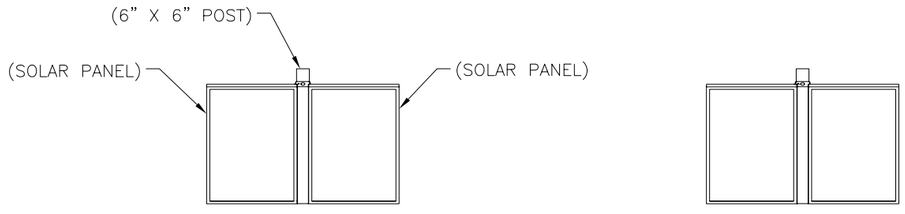

FIELD LAYOUT PLAN VIEW
(PREFERRED LAYOUT)

SPACING IS BASED ON:
TRACKER HEIGHTS: ELEVATION-LEVEL
TRACKERS IN-LINE, FACING SOUTH

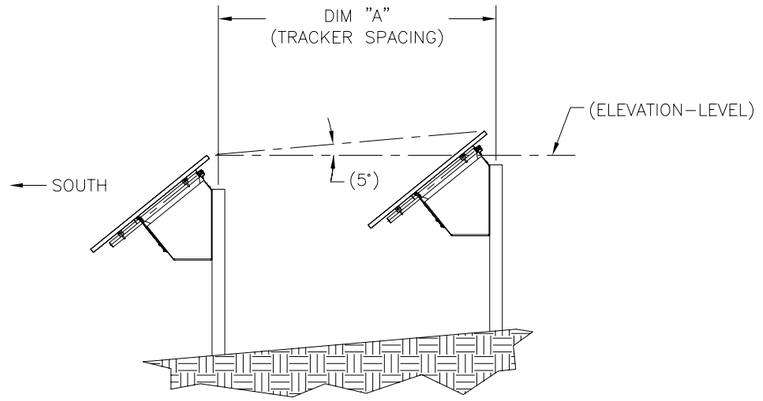

IF TRACKER ELEVATION INCREASES FACING SOUTH AS SHOWN, DIM "A" TRACKER SPACING MAY BE DECREASED. EXAMPLE: DIM "A" MAY BE 10' @ 5°

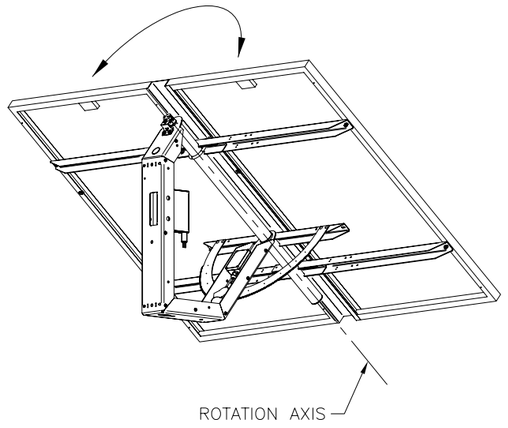

DPT-470

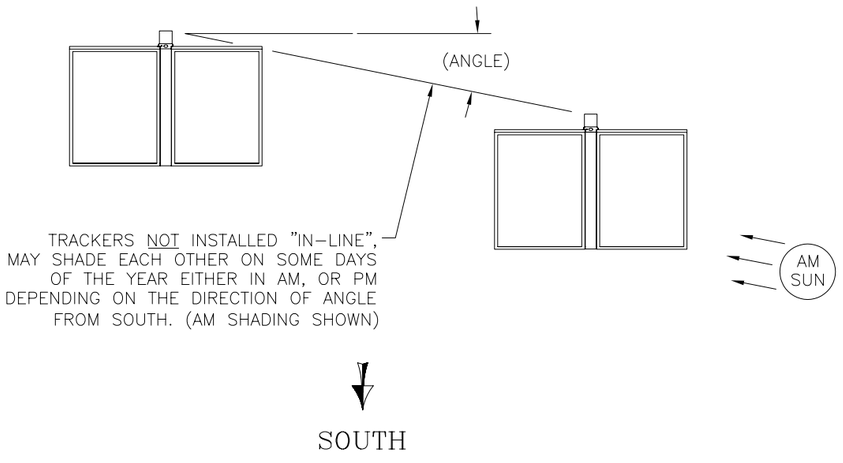

OTHER SITE SHADING CONSIDERATIONS

INVERTER CONFIGURATION 1:
1 EA ENPHASE D380 INVERTER PER DPT-470
ENPHASE D380 INVERTERS PER 20 AMP BRANCH:
10 EA@ 240V
15 EA@ 208V
UP TO 160 EA D380 INVERTERS
PER ENPHASE ENVOY INTERNET GATEWAY

INVERTER CONFIGURATION 2:
2 EA M215 INVERTERS PER DPT-470
ENPHASE M215 INVERTERS PER 20 AMP BRANCH:
17 EA @ 240V (8 EA DPT-470)
25 EA @ 208V (12 EA DPT-470)

REVISION STATUS OF SHEETS	REVISIONS			
	LTR	DESCRIPTION	DATE	APPROVAL
	1	POC	05/02/2011	WDF
	2	TRACKER SPACING WAS: 15'X10'	01/10/2012	WDF

QTY REQD	NOMENCLATURE OR DESCRIPTION	CAGE CODE	PART OR IDENTIFYING NO	SPECIFICATION	ITEM NO

PARTS LIST

AUTOCAD SYSTEM DRAWING
DO NOT REVISE MANUALLY

UNLESS OTHERWISE SPECIFIED ALL DIMENSIONS ARE IN INCHES
DECIMALS-- XX-- ± .03
DECIMALS-- XXX-- ± .010
FRACTIONS------- ± ---
ANGLES--------- ± 30'

UNLESS OTHERWISE SPECIFIED	
HOLE SIZE	TOLERANCE
.0135- .125	+.004/-.002
.126- .250	+.005/-.002
.251- .500	+.006/-.002
.501- .750	+.008/-.002
.751-1.000	+.010/-.002
1.001-2.000	+.012/-.002

SIGNATURE	DATE
DRAWN BY WDF	05/02/2011
CHECKED BY	
APPROVED BY	
PROJECT ENGR	
APPROVED FOR	

ATR ADVANCED TECHNOLOGY AND RESEARCH
COLUMBIA, MD 21046

DUAL PANEL TRACKER
TYPICAL FIELD LAYOUT

CAGE NO 7S553 | D-DPT4502

SCALE 1/32 | DO NOT SCALE DRAWING | SHEET 1 OF

D-DPT4502

THIS DATA IS THE CONFIDENTIAL PROPERTY OF ATR AND MAY NOT BE USED, RELEASED, REPRODUCED, DISTRIBUTED, OR PUBLISHED WITHOUT THE EXPRESS WRITTEN PERMISSION OF ADVANCED TECHNOLOGY AND RESEARCH